Typical Electrical QA Inspection Process

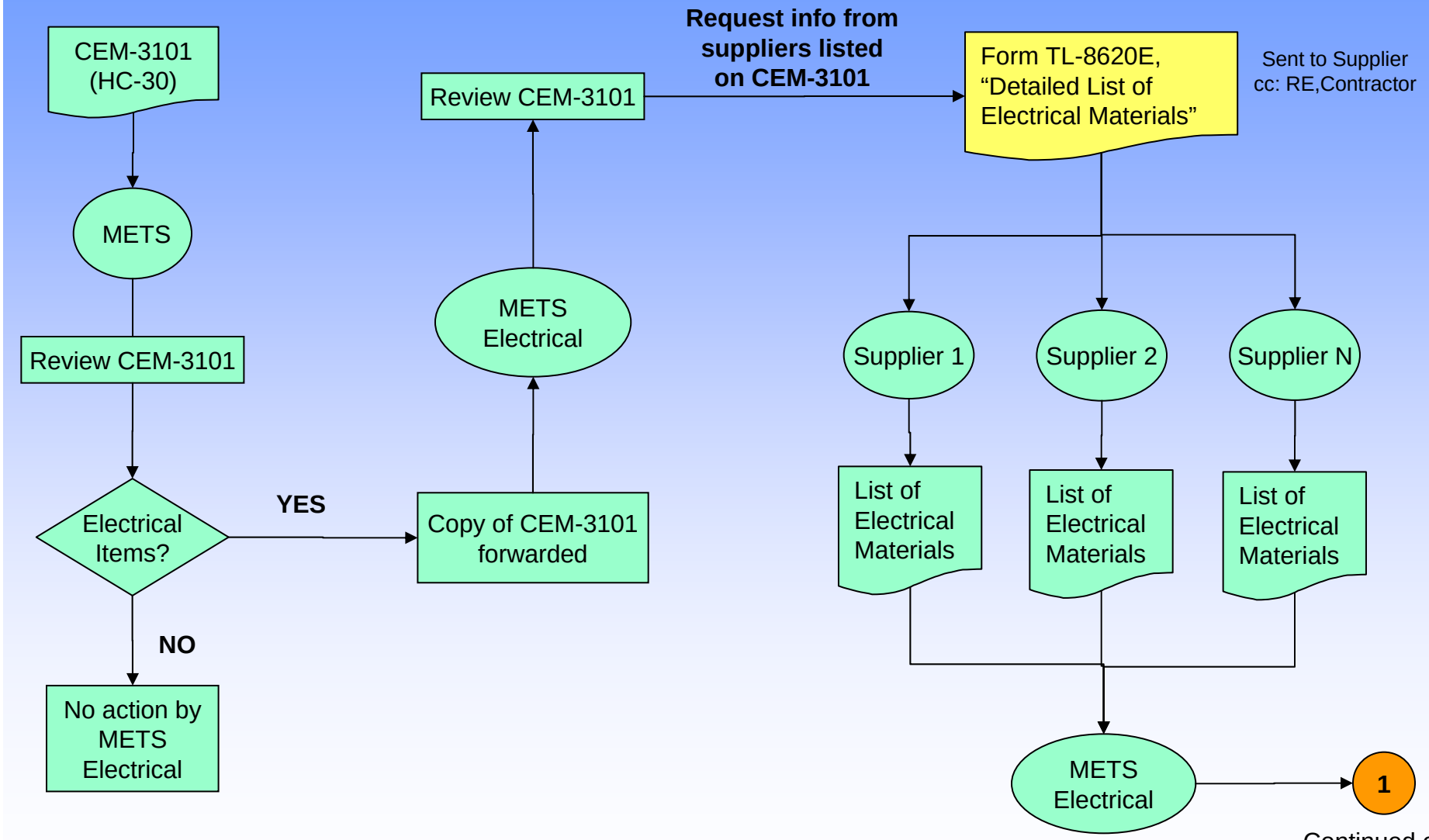

Electrical QA Inspection Process (cont.)

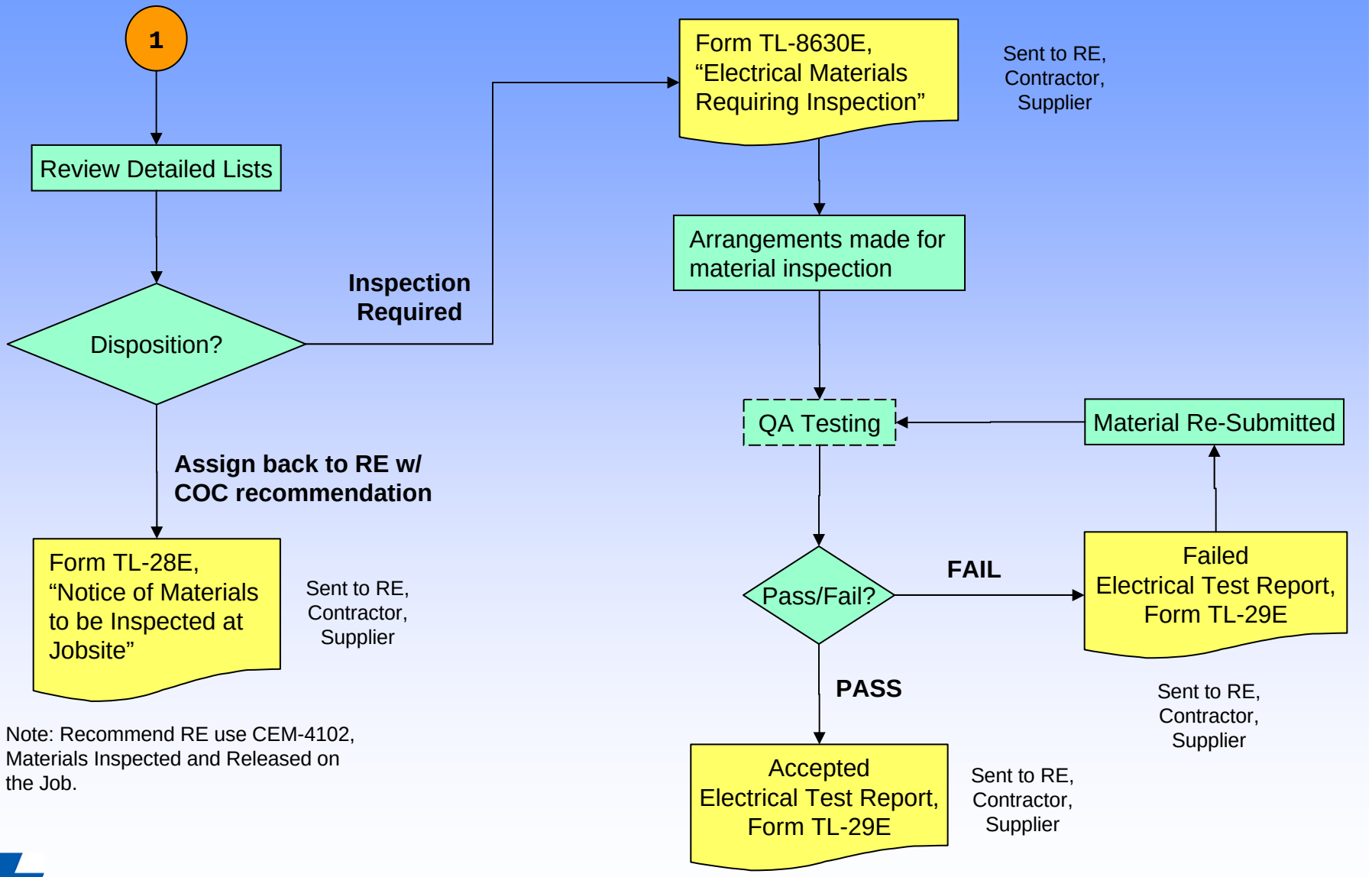

Note: Recommend RE use CEM-4102, Materials Inspected and Released on the Job.

Caltrans

Typical QA inspection Process